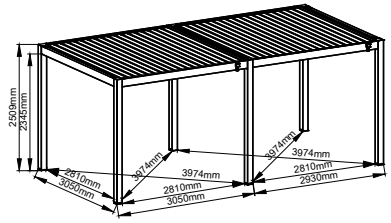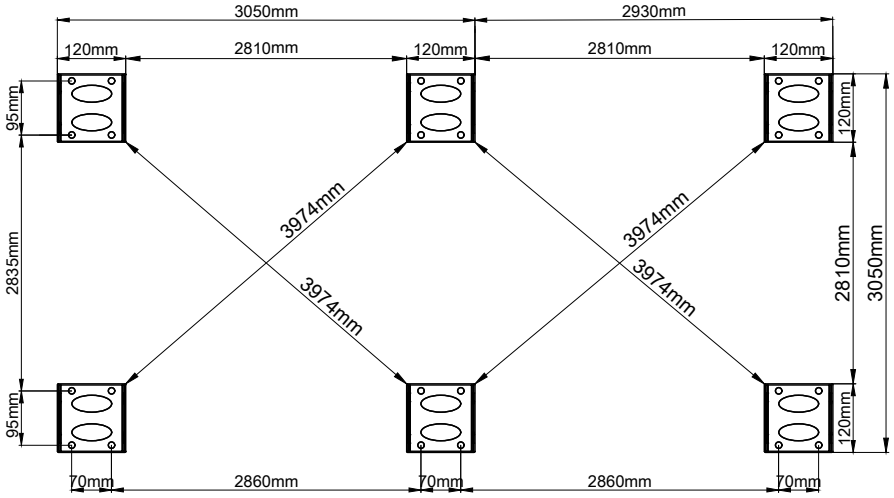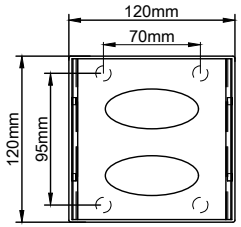LUXE EXTENSION
2.93 X 3.05 X 2.5M